IT 6502 DIGITAL SIGNAL PROCESSING

UNIT – I SIGNALS AND SYSTEMS
PART A

1. What is DSP? (May 2014)

DSP is defined as changing or analyzing information which has discrete sequences of numbers.

2.What are the applications of DSP?

1. Image processing like pattern recognition, animation, robotic vision, image enhancement.
2. Instrumentation and control like spectral analysis, noise reduction, data compression.
3. Speech/Audio like speech recognition, speech synthesis, equalization.
4. Biomedical like scanners ECG analysis, patient monitoring.

3. What are the advantages and limitations of digital signal processing? (Nov 2014)

Disadvantages: DSP systems are expensive as compared to analog system, Bandwidth limitations and System complexity. Advantages of digital Signal processing: 1. Digital programmable systems are reconfigurable.DSP provides better accuracy. 3. Digital signals can be easily stored. 4.DSP systems are cheaper.

4. Write the major classification of signals?

There are various types of signals. Every signal is having its own characteristic The processing of signal mainly depends on the characteristics of that particular signal So classification of signal is necessary Broadly the signal are classified as follows: 1. Continuous and discrete time signals.

2. Continuous valued and discrete valued signals. 3. Periodic and non periodic signals. 4. Even and odd signals. 5. Energy and power signals. 6. Deterministic and random signals. 7. Multichannel and multidimensional signals.

5. What are energy and power signals?

The energy E of a signal x (n) is defined as $E = \sum_{n=-\infty} |x(n)|$ The energy of a signal can be finite or infinite. If E is finite i.e $0<E<\infty$ then x(n) is called an energy signal. Many signals that posses infinite energy, have a finite average power. The average Power of a discrete time signal x(n) is defined as $P = \lim_{N\to\infty} \frac{1}{2N+1} \sum_{n=-N}^{N} [x(n)]^2$. If E is finite, P = 0. On the other hand, If E is infinite; the average power may be either finite or infinite. If P is finite (and non zero), the signal is called a power signal.

6. Differentiate: Linear and Nonlinear systems.

A system is called linear, if superposition principle applies to that system. This means that linear system may be defined as one whose response to the sum of the weighted inputs is same as the sum of the weighted responses.Linearity property for discrete time systems may be written as:

$£[a_1x_1(n)+a_2x_2(n)] \rightarrow a_1y_1(n)+a_2y_2(n)$

For any non-linear system, the principle of super-position does not hold true and the above are not satisfied. Few examples of linear system are filters, communication channels etc.

7. What is the causality condition for an LTI system?

The necessary and sufficient condition for causality of an LTI system is, its unit sample response h(n)=0 for negative values of n i.e., h(n)= 0 for n.

8. State sampling theorem. (Nov 2013,May2015)

A continuous time signal x(t) can be completely represented in its sampled form and recovered back from the sample form if the sampling frequency $f_s \geq 2\omega$,where 'ω' is the maximum frequency of the continuous time signal x(t)

9. State the necessary and sufficient condition for stability of LTI systems

LTI system is stable if its impulse response is absolutely summable . The equation which gives the condition of stability in terms of impulse response of the system is given below where h(k)= h(n) is the impulse response of LTI system .

$$\sum_{k=-\infty}^{\infty} (h(k)) < \infty$$

10. Convolve {1,3,1) and (1,2,2,)

x(n)={1,3,1}h(n)={1,2,2}

	x(0) 1	x(1) 3	x(2) 1
h(0)1	1	3	1
h(1)2	2	6	2
h(2)2	2	6	2

Range of n is $y_l = x_l + h_l = 0 + 0 = 0$

and $y_h = x_h + h_h = 2 + 2 = 4$

$y(0) = h(0)\,x(0) = 1$

$y(1) = h(1)\,x(0) + h(0)\,x(1)$

$= 2 + 3 = 5$

$y(2) = h(2)\,x(0) + h(1)\,x(1) + h(0)\,x(2)$

$= 2 + 6 + 1 = 9$

$y(3) = h(2)\,x(1) + h(1)\,x(2)$

$= 6 + 2 = 8$

$y(4) = h(2)\,x(2) = 2$

$y(n) = \{1,5,9,8,2\}$

y(n) is output of the convolution.

11. Differentiate time variant from time invariant system. (May 2016)

A system is called time invariant if its input output characteristics do not change with time. A LTI discrete time system satisfies both the linearity and the time invariance properties. To test if any given system is time invariant, first apply an arbitrary sequence x (n) and find y (n).

y (n) = T [x (n)]

Now delay the input sequence by k samples and find output sequence denote it as. y(n,k)= T[x(n-k)] Delay the output sequence by k samples denote it as

y (n,k)=y(n-k)

For all possible values of k, the system is time invariant. on the other hand y (n,k)≠y(n-k)

Even for one value of k, the system is time variant.

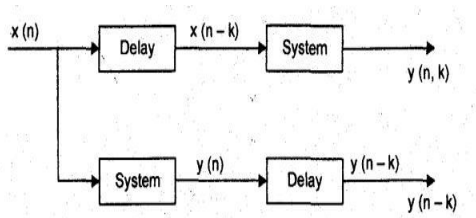

12. What are symmetric and asymmetric signals?

An even signal is that type of signal which exhibits symmetry in the time domain. This type of signal is identical about the origin Mathematically, an even signal must satisfy the following condition. For a discrete-time signal, x (n) = x (-n). Figure shows continuous-time and discrete-time even signals.

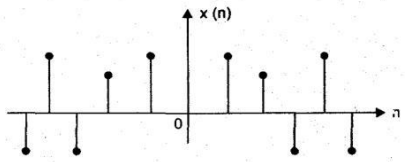

(b) Discrete-time even signal

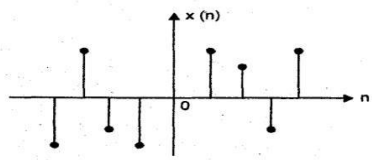

(b) Discrete-time odd signal

Similarly, an odd signal is that type of signal which exhibits anti-symmetry. This type of signal is not identical about the origin actually, the signal is identical to its negative mathematically, and an odd signal must satisfy the following condition. For a discrete-time signal, x (n) = x (- n). Figure shows continuous-time and discrete-time odd signals

13. Determine the power and energy of the unit step sequence.

The average power of the unit step signal is

$$P = \lim_{N\to\infty} \frac{1}{2N+1} \sum_{n=0}^{N} |u(n)|^2$$

$$= \lim_{N\to\infty} \frac{N+1}{2N+1} = \lim_{N\to\infty} \frac{1+1/N}{2+1/N2} = \frac{1}{}$$

Consequently, the unit step sequence is a power signal. Its energy is infinite.

14. Consider a system with impulse response h(n) =3^{-n}u(n). Determine whether the system is stable or unstable.

$$S = \sum_{n=-\infty}^{\infty} |h(n)| = \sum_{n=-\infty}^{\infty} 3^{-n} u(n)$$

Since S < ∞, the system is stable.

$$\sum_{n=-\infty}^{\infty} 3^{-n} u(n) = \frac{1}{1-\frac{1}{3}} = \frac{3}{2} < \infty$$

15. What is Region of convergence?

The z-transform is an infinite power series, it exists only for those values of z for which the series converges. The region of convergence (ROC) of X (z) is set of all values of z for which X (z) attain a finite value. The ROC of a finite duration signal is the entire z-plane, except possibly the point z=0 and z=∞.

16. What are the conditions for the region of convergence of a non causal LTI system?

The condition for non-causal discrete time LTI system is that the impulse response of a causal discrete time LTI system is given as h(n)≠0, for n<0.This means that h (n) is two sided. The ROC of

H (z) of non-causal discrete time LTI system is the entire z-plane except $z = \infty$.

17. Determine to Z-transform of the following signal and sketch the pole zero pattern:

$$\mathbf{x(n) = (-1)^{n} (2)^{-n} u(n)}$$

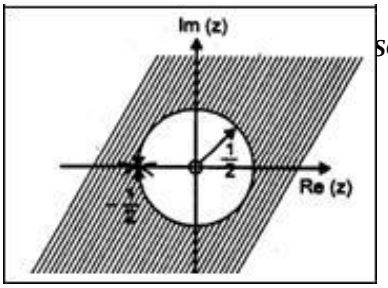

$$X(z)=\sum_{n=-\infty}^{\infty} x(n)Z^{-n}$$

$$X(z)=\sum_{n=-\infty}^{\infty}(-1)^{n}(2)^{-n}u(n)Z^{-n}$$

$$X(z)=\sum_{n=-\infty}^{\infty}(-\frac{1}{2})^{n}u(n)Z^{-n}=\frac{Z}{Z+\frac{1}{2}} \text{ with ROC } |z|>\frac{1}{2}$$

18. Find the Z-transforms of $x(n)=\delta(n)$.

$$X(z)=\sum_{n=-\infty}^{\infty}x(n)z^{-n}=\sum_{n=-\infty}^{\infty}\delta(n)z^{-n}$$

$=\ldots+\delta(-1)z^{1}+\delta(0)z^{0}+\delta(1)z^{-1}+\ldots=1$.

The ROC is entire z-.plane.

19. State the convolution property of Z- transform?(Nov 2013)

The convolution property for Z-transforms is very important for systems analysis and design. The transform of the convolution is the product of the transforms. ie., $z[f_1(k)*f_2(k)] = F_1(z).F_2(z)$

20. Determine whether the following sinusoidals are periodic. If periodic, then compute their fundamental period. (a) cos(0.01πn) (b) sin(62πn/10) (Nov 2014)

(a) cos(0.01πn)

2πf=π0.01 , f=0.01/2=1/200 (since f=K/N) , It is periodic. Fundamental Period, N=200

(b) sin(62πn/10)

2πf=62π/10 , f=31/10, Therefore it is periodic. N=10

21. What is quantization error?(May 2015)

Quantization is the process of mapping a large set of input values to a (countable) smaller set. Rounding and truncation are typical examples of quantization processes. Quantization also forms the core of essentially all lossy compression algorithms. The difference between an input value and its quantized value (such as round-off error) is referred to as quantization error.

22. Test whether the system y(n)=0.5x(n)+9 is linear and time variant (Nov 2015)

Linearity property for discrete time systems may be written as:

$£[a_1x_1(n)+a_2x_2(n)]\rightarrow a_1y_1(n)+a_2y_2(n)$

$H(a_1x_1(n)+a_2x_2(n)) = 0.5\,(a_1x_1(n)+a_2x_2(n))+9 \neq a_1y_1(n)+a_2y_2(n)$ It is not linear system y(n-k)

= y'(n-k) = 0.5x(n-k)+9 The above system is time invariant

23.What is a continous and discrete time signal?(May 2016)

Continuous time signal: It is referred as analog signal i.e., the signal is represented continuously in time.**Discrete time signal:** Signals are represented as sequence at discrete time intervals .

24. Find whether the signal x(n)=cos(π/3 n + π/6)is power or energy signal (Nov 2015)

The average Power of a discrete time signal x(n) is defined as $P=\lim_{N\to\infty}\frac{1}{2N+1}\sum_{n=-N}^{N}[x(n)]^2$

P= ½ with E=∞. So this signal is power signal

PART B

1.What is meant by energy and power signal? Determine whether the following signals are energy or power or neither energy nor power signals.

$x_1(n)=\left(\frac{1}{2}\right)^{n}u(n)$, $x_2(n)=\sin\left(\frac{\pi}{6}n\right)$, $x_3(n)=e^{j\left(\frac{\pi n}{3}+\frac{\pi}{6}\right)}$,

$x_4(n)=e^{2n}u(n)$, $x_5(n)=\left(\frac{1}{5}\right)^{n}u(n)$, $x_6(n)=e^{j\left(\frac{\pi n}{3}+\frac{\pi}{7}\right)}$

2. Find the Z- Transform of following: **(May 2016)**

$(a)x(n)=\sin(n\omega_0)u(n)$

$(b)x(n)=\cos(\omega_o n)u(n)$

$(c)x(n)=a^{n}u(n)$

3.Find the Z-transform and region of convergence for the following sequence. **(May 2014)**

$$x(n)=7\left(\frac{1}{3}\right)^{n}u(n)-6\left(\frac{1}{2}\right)^{n}u(n)$$

Apply initial value theorem and check the z-transform whether it is correct or not.

4. Determine the inverse Z-transform of

$$X(z)=\frac{1+2z^{-1}}{1-2z^{-1}+z^{-2}}$$

(a) ROC |z| > 1 (b) ROC |z| < 1

5.i)Consider the analog signal **x(t)= 3cos 2000πt+5sin6000πt+10cos1200πt**.What is the Nyquist rate for this signal?
ii)Compute the convolution of the signals **x(n)={1,2,3,4,5,3,-1,-2}** and **h(n)={3,2,1,4}** using tabulation method.

6.Check whether the following systems are Static or Dynamic, Linear or Nonlinear, Time invariant or Time varying, causal or non-causal, Stable or unstable 1)y(n)=cos[x(n)]2)y(n)=x(-n+2) 3)y(n)=x(2n) 4)y(n)=x(n)cosω0 (n) 5) y(n)= nx(n) **(Nov/Dec 2013/ May2014/ May2016)**

7.a)Find the convolution of the signals x(n)= 3^n u(-n) and h(n)= $(1/3)^n$ u(n-2)
b)Applying concentric circle method, compute circular convolution of the sequences h(n)= {1,2,3,4} and x(n)= {1,2,3} **(May 2015)**

8.Explain the process of A/D conversion of signal in terms of sampling, quantization and coding **(May 2015)**

9.i) Consider the DT system y(n) = 10x(n) cos(0.25πn + θ) Check if the system is a)linear b)time invariant c) Causal d) Stable
ii) Define energy and power DT signals
iii) Explain the basic signal in DT signal and systems **(Nov 2015)**

10.Determine the Z-transform of a) x(n)= $(1/2)^n$ u(n) b) x(n)= a^nu(n)+b^nu(-n-1) **(Nov 2015)**

UNIT - II FREQUENCY TRANSFORMATIONS
PART A

1. Define DFT.

It is a finite duration discrete frequency sequence which is obtained by sampling one period of fourier transform. Sampling is done 'N' equally spaced points over the period extending from ω = 0 to 2π.The DFT of discrete sequence x(n) is denoted by x(k) and it is given by.

$$x(k) = \sum_{n=0}^{N-1} x(n).e^{\frac{-j2\pi kn}{N}}$$

where k = 0, 1, 2 N-1.

2. Define the Discrete Time Fourier Transform.

The Discrete Time Fourier Transform (DTFT) $X(e^{jw})$ of a discrete line signal x(n) is expressed as

$$X(e^{jw}) = \sum_{n=-\infty}^{\infty} x(n)e^{-jwn}$$

Symbolically, this may be expressed as

$$x(n) \xleftarrow{\text{DTFT}} X(e^{jw})$$

DTFT is periodic units period 2π . So any interval of length 2π is sufficient for the complete specification of the spectrum. Generally, we draw the spectrum in the fundamental interval(-π,π).

3. Explain the symmetry properties of DFTs which provide basis for fast algorithms. (May2014)

Most approaches for improving the efficiency of computation of DFT, exploits the symmetry and periodicity property of W_N^{kn} i.e. $\mathbf{W_N^{(k+N/2)} = -W_N^k}$ (Symmetry property), $\mathbf{W_N^{(k+N)} = W_N^k}$ (Periodicity property)

4. What is zero padding in DFT?

The process of lengthening a sequence by adding zero valued samples is called appending with zeros or zero padding. This is done to equate linear convolution with circular convolutions in case of DFT.

5. What is the importance of FFT's?

Fast Fourier Transform (FFT) is to decompose successively the N-point DFT computation into computations of smaller size DFT's and to take advantage of the periodicity and symmetry properties of the complex number W_N^{kn} .Such decompositions, if properly carried out, can result in a significant surveying in the computational complexity given by the total number of multiplications and the total number of additions needed to compute all N DFT samples. The total no. of complex multiplications is reduced to $(N/2)\log_2 N$ w.r.t. DFT and the total no. of complex additions is $N\log_2 N$.

6. What is the advantage of in-place computation? (Nov2014)

The main advantage of in-place computation is reduction in the memory size in-place computation reduces the memory size.

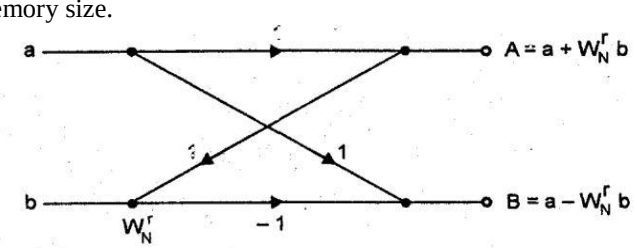

General Butterfly structure

'a' & 'b' are inputs and 'A' and 'B' are outputs of butterfly. For anyone input 'a' and 'b' two memory locations are required for each. One memory location to store real part and other memory location to store imagining part. So for both inputs 'a' & 'b' = 2 + 2 = 4 memory location are required. Thus outputs 'A' & 'B' are calculated by using the values 'a' & 'b' stored in memory. 'A' & 'B' complex numbers, so 2 + 2 = 4 memory location are required. Once the computation of 'A' & 'B' done then values of 'a' & 'b' are not required. Instead of storing 'A' & 'B' at other memory locations, there values are stored at the same place where 'a' & 'b' were stored. That means 'A' & 'B' are stored in the place of 'a' & 'b'. This is called as in-place computation.

7. Indicate the number of stages, the number of complex multiplications at each stage, and the total number of multiplications required to compute 64-point FFT using radix-2 algorithm.

Number of stages $= \log_2 N = \log_2 64 = 6$

Number of complex multiplication $= N_2 \log_2 N = \frac{64}{2} \times 6 = 192$

Total number of multiplications $= N \log_2 N = 64 \times 6 = 384.$

8. Write the applications of FFT algorithm.

Linear filtering, correlation analysis and spectrum analysis are applications of FFT algorithm.

9. What is a decimation in time algorithm?

DIT algorithm is used to calculate the DFT of a N point sequence. Initially the N point sequence is divided into two N/2 point sequences X_{even} (n) and X_{odd} (n). The N/2 point DFTs of these two sequences are evaluated and combined to give the N point DFT. Similarly the N/2 point DFTs can beexpressed as a combination of N/4 point DFTs. This process is continued until left with 2 point DFT. This algorithm is called decimation in time because the sequence X(n) is often splitted into smaller sequences.

10. Compute the DFT of x(n) =δ(n).(May 2015)

$$X(k) = \sum_{n=0}^{N-1} x(n) W_N^{Kn} = \sum_{n=0}^{N-1} \delta(n)\, W_N^{Kn} = 1.$$

11. What is meant by radix-2 FFT? (May 2014/May 2015)

The FFT algorithm is most efficient in calculating N point DFT. If the number of point N can be expressed as a power of 2 ie $N= 2^M$ where M is an integer , then this algorithm is known as radix-2 FFT algorithm.

12. What is decimation in frequency algorithm?

It is one of the FFT algorithms. In this, the output sequence X(k) is divided into smaller subsequences, that is why the name decimation in frequency. Initially the input sequence is divided into two consisting of the first N/2 samples of X(n) and the last N/2 samples of X(n).The above procedure can now be iterated to express each N/2 point DFT as a combination of two N/4 point DFTs.This process is continued until we are left with 2 point and 1 DFT.

13. What are the applications of FFT algorithms?

The applications of FFT algorithms includes Linear filtering, Correlation, Spectrum analysis.

14. Calculate the number of multiplications needed in the calculation of DFT and FFT with64 point sequence.(Nov 2014)

Number of complex multiplications required using direct computation is $N^2 = 64^2 = 4096$ Number of complex multiplications required using FFT is (N/2) log N = ((64/2) log 64 = 192 Speed improvement factor (4096/192) = 21.33.

15. What are the properties of DIT FFT?

1. Computation are done in place. Once a butterfly structure operation is performed on a pair of complex numbers (a,b) to produce (A,B) there is no need to save the input pair (a,b). Hence we can store the results (A,B) in the same location as(a,b).
2. Data x (n) after decimation is stored in reverse order.

16. What are the advantages of FFT algorithm?

Fast fourier transform reduces the computation time. In DFT computation, number of multiplication is N^2 and the number of addition is N(N-1). In FFT algorithm, number of multiplication is only $N/2(\log_2 N)$. Hence FFT reduces the number of elements (adder, multiplier Z & delay elements). This is achieved by effectively utilizing the symmetric and periodicity properties of Fourier transform.

17. What is meant by radix 4 FFT?

FFT algorithm used to compute DFT when the number of data points N in the DFT is a power of 4.

18.What are the differences and similarities between DIF and DIT algorithms? Differences:

For DIT the input is bit reversed while the output is in natural order, whereas for DIF the input is in natural order while the output is bit reversed.

The DIF butterfly is slightly different from the DIT butterfly, the difference being that the complex multiplication takes place after the add-subtract operation in DIF.

Similarities:

Both algorithms require same number of operations to compute the DFT. Both algorithms can be done in place and both need to perform bit reversal at some place during the computation.

19. In the direct computation of N-point DFT of a sequence how many multiplication and additions are required? (Nov 2014)

Number of additions required = N(N-1); Number of multiplications required = N^2

20.Using the definition W= $e^{-i(2\pi/N)}$ and the Euler identity $e^{\pm i\theta}$ = cosθ±isinθ, What is the value of $W^{N/3}$?(Nov/Dec 2014)

$W_{N/3} = e^{-i(2\pi/N)(N/3)} = \cos(2\pi/3) - i\sin(2\pi/3) = -0.5 - i(\sqrt{3}/2)$

21.The first five DFT values for N=8 is as follows X(k)= { 28,-4+j9.656,-4+4j,-4+j1.656,-4},Find the rest of the values ? (Nov 2015)

X(k)= { 28,-4+j9.656,-4+4j,-4+j1.656,-4,,-4-j1.656,-4-4j,-4-j9.656}

22.Compute 4 point IDFT of X(k)={2,3+j,-4,3-j}(Nov 2015)

Here N=4 .

$x(n) = \frac{1}{N}\sum_{n=0}^{N-1} X(k) W_N^{-kn}$ = {1,1,-2,2}

23.Compute the DFT of the sequence x(n)={1,1,1,1}(May 2016)

$$X(k) = \sum_{n=0}^{N-1} x(n)e^{-j2\pi nk/N} \quad where\, k = 0,1,2,.....N-1$$

$$X(k) = \sum_{n=0}^{3} x(n)e^{-j2\pi nk/4}$$

$$X(k) = \{4,0,0,0\}$$

24.Perform circular convolution of two sequences x(n)= {1,2,3} and h(n)={4,5,6}.(May 2016)

The circular convolution of the above sequences can be obtained by using matrix method.

$$\begin{bmatrix} h(0) & h(2) & h(1) \\ h(1) & h(0) & h(2) \\ h(2) & h(1) & h(0) \end{bmatrix}\begin{bmatrix} x(0) \\ x(1) \\ x(2) \end{bmatrix} = \begin{bmatrix} y(0) \\ y(1) \\ y(2) \end{bmatrix}$$

$$\begin{bmatrix} 1 & 3 & 2 \\ 2 & 1 & 3 \\ 3 & 2 & 1 \end{bmatrix}\begin{bmatrix} 4 \\ 5 \\ 6 \end{bmatrix} = \begin{bmatrix} 31 \\ 31 \\ 28 \end{bmatrix}$$

$y(n) = \{31, 31, 28\}$

PART B

1. Define circular convolution. How can linear convolution be realized using circular convolution? and Discuss various properties of DFT.
2. Develop a Radix-2, 8-point DIF FFT algorithm with neat flow chart.
3. Develop a Radix-2, 8-point DIT FFT algorithm with neat flow chart.
4. Draw a 8 point radix-2 FFT DIT flow graphs and obtain DFT of the following sequence x(n)=(0,1,-1,0,0,2,-2,0) **(May 2014)**

5.In an LTI system,the input x(n)={3,-1,0,1,3,2,0,1,2,1}and the impulse response h(n)= {1,1,1}.Find the output y(n) using overlap save method **(May 2016)**

6. Compute the DFT of sequence defined by : x(n) = $(-1)^n$ for (a) N = even (b)N= odd. Plot the magnitude and phase spectrum.

7.i) Compute the DFT of x(n)= {1,-3,5,-6}

ii)By means of the DFT & IDFT, determine the sequence x_3 (n) corresponding to the circular convolution of the sequence x_1(n)={2,-1,1,-1} and x_2(n)={1,2,3,4} (Nov/Dec 2015)

8. By means of the DFT & IDFT, determine the response of the FIR filter with impulse response h(n)={1,2,3} to the input sequence x(n)={1,2,2}

9.Compute the DFT for the sequence x(n)= {1,1,1,1,1,1,1,0} using radix-2 DIT-FFT algorithm**(May 2016)**

10.i)Compute the 8 point DFT of the following sequence using radix 2 Decimation in Time FFT algorithm x(n) = {1,-1, 1,-1, 1,-1, 1,-1} ii) Discuss the use of FFT in linear filtering.

11.a)Find the 4 point DFT of i) x(n) = 2^n ii) x(n) = {0,1,0,-1}

b) State and prove periodicity and time reversal properties of DFT **(Nov2014)**

12. Find DFT of x(n)={1,0,0,0,0,0,0,0} using DIT FFT algorithm **(Nov 2015)**

UNIT - III IIR FILTER DESIGN

PART A

1. What is frequency warping in bilinear transformation?

The mapping of frequency from Ω to ω is approximately linear for small value of Ω & ω. For the higher frequencies, however the relation between Ω & ω becomes highly non-linear. This introduces the distortion in the frequency scale of digital filter relative to analog filter. This effect is known as warping effect.

2. What are the conditions for distortion less transmission?

1.The conditions for distortion less transmission are given below.

2.Anti-aliasing filter must be used which is a low pass filter to remove high frequency noise contain in input signal.

It avoids aliasing effect also.
3.Sample and hold circuit is used to keep the voltage level constant.

4.Output signal of digital to analog converter is analog i.e. a continuous signal. But it contains high frequency components. Such high frequency components are understood. To remove these components reconstruction filter is used.
5.Amplifiers are used sometimes to bring the voltage level of input signal upto required level for distortion less transmission.

3. What are methods used to convert analog to digital filter?

Approximation of derivatives, Impulse invariant method & Bilinear transformation method.

4. Write the pole mapping rule in Impulse invariant method?

A pole located at $s = s_p$ in the s plane is transferred into a pole in the z plane located at $Z = e^{spTs}$. Each strip of width $2\pi/T$ on left half of s-plane should be mapped to region inside the unit circle in z-plane. The imaginary axis of s-plane is mapped to unit circle in z-plane. Left half of s-plane is mapped to outer region of unit circle.

5. What are the disadvantages of Impulse invariant method?

It provides many to one pole mapping from s-plane to z-plane. So aliasing will occur in IIT.

6. What are the advantages of Bilinear transformation method?

The Bilinear transform method provides non linear one to one mapping of the frequency points on the jw axis in the S plane to those on the unit circle in the Z plane.i.e Entire jw axis for $-\infty<w<\infty$ maps uniquely on to a unit circle $-\pi/T<\omega/T<-\pi/T$. This procedure allows us to implement digital high pass filters from their analog counter parts. There is no aliasing effect.

7. What is the need for prewarping or prescaling.(May 2016)

For large frequency values the non linear compression that occurs in the mapping of Ω to ω is more apparent .This compression causes the transfer function at high Ω frequency to be highly distorted when it is translated to the ω domain. This compression is being compensated by introducing a prescaling or prewarpping to Ω frequency scale. For bilinear transform Ω scale is converted into Ω^* scale (i.e) $\Omega^* = 2/T_S \tan(\Omega T_S/2)$(prewarped frequency)

8. Comparison of analog and digital filters. (Nov 2014)

S.No.	Analog filter	Digital filter
1.	In analog filter both input and output continuous time signal	In digital filter,both the input and output are discrete time signals.
2.	It can be constructed using active and passive components.	It can be constructed using adder, multiplier and delay units.
3.	These filters operate in infinite frq. Range, theoretically but in practice it is limited by finite max. operating freq. depending upon the devices used.	freq. range is restricted to half the sampling range and it is also restricted by max. computational speed available for particular application.
4.	It is defined by linear differential eqn.	It is defined by linear difference eqn

9.What are the advantages of digital filter?

1. Filter coefficient can be changed any time thus it implements the adaptive future.
2. It does not require impedance matching between input and output.
3.Multiple filtering is possible. 4. Improved accuracy, stability and dynamic range.

10.What are disadvantages of Digital Filter?

1.The bandwidth of the filter is limited by sampling frequency.
2.The performance of the digital filter depends on the hardware used to implement the filter.
3.The quantization error arises due to finite word length effect in representation of signal and filter coefficient.

11.Compare Butterworth filter and chebyshev filter.

Butterworth filter

1.The Magnitude response of Butterworth filter decreases monotonically as the frequency increases.
2.The order of butterworth filter is more, thus it requires more elements to construct and is expensive.
3.The Poles of the butterworth filter lies along the circle.
4.Magnitude response is flat at $\omega=0$ thus it is known as maximally flat filter.
5.The Transition width is more.

Chebyshev Filter

1.The Magnitude response of Chebyshev filter will not decrease monotonically with frequency because it exhibits ripples in pass band or stop band.
2.The Transition width is very small
3.For the same specifications the order of the filter is small and is less complex and inexpensive.
4.The poles of chebyshev filter lies along the ellipse.
5.Magnitude response produces ripples in the pass band or stop band thus it is known as equiripple filter.

12.Sketch the mapping of s-plane and z-plane in approximation of derivative. (Nov 2014)

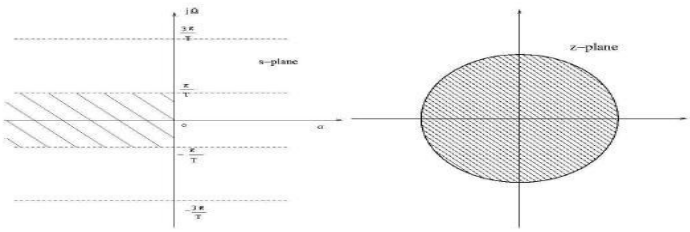

13. Compare Bilinear Transformation and Impulse Invariant Transformation (May2014)

Bilinear Transformation	**Impulse Invariant Transformation**
1. It is one to one mapping	1. It is many to one mappping
2. The relation between analog and digital frequency is nonlinear, ie Ω=2/T tan(ω/2)	2.The relation between analog and digital frequency is linear, ie ω=ΩT or Ω=ω/T
3. Due to nonlinear relation between ω and Ω distortion occurs in frequency domain of digital filter.	3. The aliasing error occur due to sampling thus this method is suitable for design of only band limited filters such Low pass and Band pass.
4. Due to the warping effect both amplitude and phase response of analog filter are affected but the magnitude response may be preserved by applying pre- warping procedure.	4. The frequency response of analog can be preserved by selecting low sampling time or high sampling frequency.

14. Draw the direct form structure of IIR filter. (May 2014/May 2015)

Direct Form I Structure **Direct Form II structure**

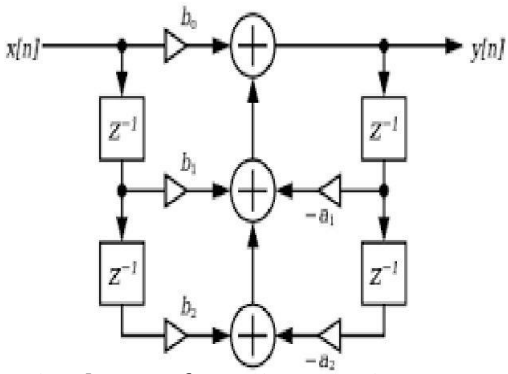

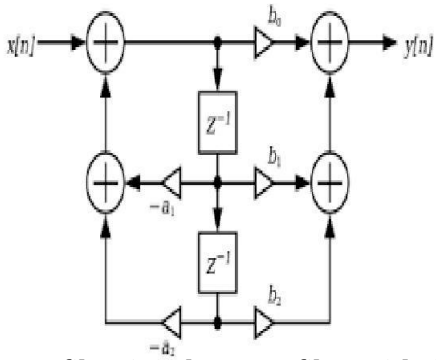

15. Write the transformation equation to convert low pass filter into low pass filter with different cut off frequency and high pass filter.

Low pass to Low pass transformatio: Substitute s S= S/Ω_C.

Low pass to High pass transformation:

Substitute S=Ω_C/S where Ω_C = Cut off frequency

16. What are the characteristics of Chebyshev filter?(May 2016)

1.Magnitude response of Chebyshev filter produces ripples in the pass band or stop band.

2.The poles of the filter lie on an ellipse.

17. Mention the properties of Butterworth filter. (Nov2013)

1.The butterwoth filter have all poles design.

2.At the cut off frequency Ω_C, the magnitude of normalized butterworth filter is 1/ $\sqrt{2}$.

3.The filter order N, completely specifies the filter and as the value of N increases the magnitude response approaches the ideal response.

18. Define bilinear transformation with expressions.(Nov 2015)

The bilinear transformation is a conformal mapping that transforms the s-plane to z-plane.In this mapping the imaginary axis of s-plane is mapped into the unit circle in z-plane,the left half of s-plane is mapped into interior of unit circle in z-plane. The bilinear mapping is alone-to-one mapping and it is accomplished when S= 2 (1-z-1/1+z-1)

20. IIR filter does not have linear phase-Justify (Nov 2015)

For a filter to have a linear phase, the condition is h(n)=h(N-1-n) and the filter would have a mirror image pole outside the unit circle for every pole inside the unit circle. This results in an unstable filter. As a result, a causal and stable IIR filter cannot have a linear phase.

19. What are the properties of chebyshev filter?

1.For ω ≥ 1 H(jω) decreases monotonically towards zero.

2.For ω ≤ 1 H(jω) it oscillates between 1 and 1\(1+ε^2)

PART B

1. Obtain the Direct form I,II ,Cascade and parallel realization of the system characterized by transfer function. H(Z) = 2(Z+2) /(Z(Z-0.1) (Z+0.5) (Z+0.4))
2. Realize the following system: y(n) = 1.4y(n-1) + 1.4y(n-2) + 0.4y(n-3) = 3x(n) + 5x(n-1) using cascade form.
3. An IIR low pass filter is to be designed to meet the following specifications.

(a) Pass-band frequency = 0 to 1.2 kHz (b) Stop-band edge = 2KHz

(c)Pass-band attenuation≤8.5db (d) Stop-band attenuation ≥15 db

Using Butterworth approximation and Bilinear transformation obtain the desired IIR digital filter.

4. A chebyshev low pass filter has the following specifications:

(a) Order of the filter = 3 (b) Ripple in pass-band = 1 db

(c) Cut off frequency = 100 Hz (d) Sampling frequency = 1 kHz.

Determine H (z) of the corresponding high pass digital filter using bilinear transformation technique.

5.A digital filter with 3 dB bandwidth of 0.25π is to be designed with the following analog filter $H(s) = \Omega_C / s + \Omega_C$ using BLT and obtain H(z). **(Nov 2014)**

6.Design a chebyshev filter for the following specification using BLT **(May 2016)**

$0.8 \le |H(e^{j\omega})| \le 1 \quad 0 \le \omega \le 0.2\pi$

$|H(e^{j\omega})| \le 0.2 \quad 0.6\pi \le \omega \le \pi$

7.The specifications of the desired low pass filter is

$0.707 \le |H(e^{j\omega})| \le 1 \; ; \quad 0 \le \omega \le \pi/2$

$|H(e^{j\omega})| \le 0.2 \; ; \quad 3\pi/4 \le \omega \le \pi$

Design Butterworth digital filter using bilinear transformation with T=1 sec.**(May 2015)**

8.i) How is mapping achieved in BLT? **(Nov 2015)**

(ii)Using IIT find H(z) of $H(s) = 2 / s^2+8s+15$

9. An IIR low pass filter is to be designed to meet the following specifications.**(Nov 2015)**

(a) Pass-band frequency = 30 Hz (b) Stop-band edge = 75Hz

(c)Pass-band attenuation≤0.89dB (d) Stop-band attenuation ≥0.2dB (e) Sampling frequency = 200Hz, Using Butterworth approximation and Bilinear transformation obtain the desired IIR digital filter.

10.Using Bilinear transformation design a high pass filter monotonic in the passband with a cut off frequency of 1000Hz and down 10dB at 350Hz .The sampling frequency is 5000Hz.**(May 2016)**

UNIT – IV FIR FILTER DESIGN

PART A

1. What is the basic difference between cascade form and direct form structures for FIR systems?

Cascade form is basically in need of series memory. No of memory space required less in case of direct-2 form of FIR w.r.t. cascade form start use of FIR systems.

2. What is the importance of Windowing? (May 2016)

1. The infinite duration impulse response can be converted to a finite duration impulse response by

trucating the infinite series at n=±N. But this results in undesirable oscillations in the pass-band and step-band of the digital filter. This is due to slow convergence of the Fourier series near the point of discontinuity. These undesirable oscillations can be reduced by using a set of time limited weighing functions is referred as windowing function.

2 The windowing function consists of main lobe which contains most of the energy of window function and side lobes which decay rapidly

3 A major effect of windowing is that the discontinuities is $H(e^{j\omega})$are converted into transition bands between values on either side of the discontinuity

4. Window function have side lobes that decrease in energy rapidly as tends to π.

3. Compare different form structures of filter realization from the point of view of speed and memory requirement. (Nov2013)

The structural representation provides the relations between some pertinent internal variable with the input and output that in turn provide the keys to implementations. There are various form of structural representations of a digital filter. In digital implementations, the delay operation can be implemented by providing stronger register for each unit delay that is required.

In case of direct I form structure realization separate delay for both input and output signal samples. So more memory is utilized by this form.

In case of direct-Il form structure realization only one delay is required for both input and output signal samples. Therefore it is more efficient in term of memory requirements.

4. In what cases FIR filters will be preferred over IIR filters? (Nov 2014)

Table IIR and FIR characteristics comparison

Characteristics	**IIR**	**FIR**
Number of multiplications	Least	Most
Sensitivity to filter coefficients	Can be high for direct form	Very low
Probability of overflow errors	Can be high for direct form	Very low
Stability	Depends on system design	Guaranteed
Linear phase	No	Guaranteed
Hardware complexity	Moderate	simple

5. What will happen if length of windows is increased in design of FIR filters?

If length of window is increased in design of FIR filter more coefficients need to be calculated andmore memory space used for it.

6. What are the essential features of a good window for FIR filters?(Nov 2013)

Features of a good window for FIR filters: 1. Side lobe level should be small. 2. Broaden middlesection.

3. Attenuation should be more. 4. Smoother magnitude response. 5. The tradeoff between main lobe widths and side lobe level can be adjusted. 6. Smoother ends. 7. If cosine term is used then side lobes are reduced further.

7.What is Gibb's Oscillation? (or) State the effect of having abrupt discontinuity in frequency response of FIR filters.(May 2014)

The truncation of Fourier series is known to introduce the unwanted ripples in the frequency response characteristics H(ω) due to non uniform convergence of Fourier series at a discontinuity These ripples or oscillatory behaviour near the band edge of the filter is known as "Gibb's phenomenon or Gibb's oscillation ".

8.What are the methods used to reduce Gibb's phenomenon?(May 2014)

There are two methods to reduce Gibb's phenomenon.

1.The discontinuity between pass band and stop band in the frequency response is avoided by introducing the transition between the pass band and stop band.

2.Another technique used for the reduction of Gibb's phenomenon is by using window function that contains a taper which decays towards zero gradually instead abruptly.

9.What are FIR filters?

The specifications of the desired filter will be given in terms of ideal frequency response Hd(ω).The impulse response $h_d(n)$ of desired filter can be obtained by inverse fourier transform of Hd(ω) which consists of infinite samples.The filters designed by selecting finite no of samples of impulse response are called FIR filters.

10. What are the disadvantages of FIR filter?

The duration of impulse response should be large to realize sharp cut off filters. The non-integral delay can lead to problems in some signal processing applications. A large amount of processing is required to realize the filter if slow convolution is used .

11. What is the necessary and sufficient conditions for linear phase characteristics of a FIR filter?(Nov 2015)

The necessary and sufficient conditions for linear phase characteristics of a FIR filter is that the phase function should be a linear function of ω,which in turn requires constant phase delay or constant phase and group delay.

12.What are the possible types of impulse response for linear phase FIR filter?

4 types: i.Symmetric impulse response when N is odd ii. Symmetric impulse response when N is even iii. Antisymmetric impulse response when N is odd iv. Antisymmetric impulse response when N is even.

13.List the factors that are to be specified in the filter design problem.

i.The maximum tolerable passband ripple. ii.The max tolerable stopband ripple. iii.The passband edge freq ω_p iv.The stopband edge freq ω_s.

14.What are the conditions that are to be satisfied for constant phase delay in linear phase FIR filter?

The conditions for const phase delay are, Phase delay, α = (N-1)/2 (i.e phase delay is const) Impulse response h(n)=h(N-1-n) (i.e. impulse response is symmetric).

15.Characteristic features of rectangular window.

i.The mainlobe width is equal to 4π/N. ii.The max sidelobe magnitude is -13 dB. iii.The sidelobe magnitude does not decreases significantly with increasing ω.

16. List features of hamming window spectrum.

i.The mainlobe width is equal to 8π/N. ii.The max sidelobe magnitude is -41dB. iii.The sidelobe magnitude remains constant for increasing ω.

17. Define phase delay& Group delay

Phase delay :It is defined as phase divided by frequency. **Group delay** :It is defined as derivative of phase with respect to frequency.

18. Why direct Fourier series method is not used in FIR filter design?

The impulse response h(n) is infinite in duration. The filter is unrealizable since the impulse response begins at- ∞ i.e no finite amount of delay can make the impulse response realizable.

Therefore the filter which results from a Fourier series representation of $h(e^{jw})$ is an unrealizable FIR Filter.

19. Give the equations of Hamming and Blackman window Hamming window:

$w(n) = 0.54-0.46\cos(2\pi n/N-1) \quad 0 \le n \le N-1$

$= 0 \quad$ otherwise

Blackman window:

$w(n) = 0.42-0.5\cos(2\pi n/N-1) + 0.08\cos(4\pi n/N-1) \quad 0 \le n \le N-1$

$= 0 \quad$ otherwise

20.What are the characteristic feature(or properties) of FIR filter?(Nov 014/Nov2015) (May 2016)

1. They have no feedback. 2.They are inherently stable system .3.The rounding off noise is reduced.

4.They can be realized with linear phase

21. What do you understand that linear phase response of the filters? (May2014/May2015)

Linear phase is a property of a filter, where the phase response of the filter is a linear function of frequency. The result is that all frequency components of the input signal are shifted in time (usually delayed) by the same constant amount, which is referred to as the phase delay. And consequently, there is no phase distortion due to the time delay of frequencies relative to one another. For a linear phase FIR filter the phase response is given by θ (ω) = - ω α

22. Write the frequency response of linear phase FIR filters when impulse response is anti symmetric when N is odd. (Nov 2015)

$$H(\omega) = \left[\sum_{n=1}^{\frac{N-1}{2}} 2h(\frac{N-1}{2} - n)sin\omega n\right] e^{j(\frac{\pi}{2} - \omega\frac{N-1}{2})}$$

PART B

1. a) Obtain a cascade realization using minimum number of multiplications for the system. H(z) = $(1+1/4\ z^{-1}+z^{-2})\ (1+1/8z^{-1}+z^{-2})$

   b) Realize the system function H(z) = $(1+2/4\ z^{-1}+3/8z^{-2}+3/4z^{-3}+7/2z^{-4})$ by using direct form structure.

2. Design an ideal band pass filter with a frequency response.

$$Hd(e^{j\omega}) = \begin{cases} 1 & -\pi/4 \le |\omega| \le 3\pi/4 \\ 0 & \text{otherwise} \end{cases}$$

Find the values of h(n) for N=7 using rectangular window.

3.Design an ideal highpass filter with a frequency response

$$Hd(e^{j\omega}) = \begin{cases} 1 & \pi/4 \le |\omega| \le \pi \\ 0 & \text{otherwise} \end{cases}$$

Find the value of h(n) for N = 11 using (a) Hamming window (b) Hanning window.(**May 2016 / Nov 2015)**

4. Determine the coefficients of a linear phase FIR filter of length M = 15 whichhas a symmetricunit sample response and a frequency response that satisfies the conditions

$$H(2\pi K/15) = \begin{cases} 1 & ,K = 0,1,2,3 \\ 0.4 & ,K=4 \\ 0 & K=5,6,7 \end{cases}$$

5.Determine the filter coefficients h(n) obtained by sampling

$$Hd(e^{j\omega}) = \begin{cases} e^{-j(N-1)\omega/2} & 0 \le |\omega| \le \pi/2 \\ 0 & \pi \le |\omega| \le \pi \end{cases}$$

for N=7. **(Nov 2014 / Nov 2015)**

6.Using Hanning window tecchnique, design a LPF which approximates an ideal filter with cutoff frequency of 1000 Hz and sampling frequency of 8KHz. Order of filter is 7.

7.Explain the digital FIR filter design using frequency sampling method**. (May 2014/May 2015)**

8.i) state and explain the properties of FIR filters. State their importance.

ii) Explain linear phase FIR structures. What are the advantages of such structures? **(May 2014)**

9**.** Design band pass filter with cut off frequencies 0.2 rad/sec and 0.3 rad/sec with M=7.Use the Hanning window function.

10. Realize the following FIR using direct and linear phase structure

    $h(n)= \delta(n) +1/3\ \delta(n-1) + ¼\ \delta(n-2)+1/3\ \delta(n-3)+ \delta(n-4)$ **(Nov 2014)**

11.Design an ideal differentiator with frequency response $H(e^{j\omega}) = j\ \omega$, $-\pi \le \omega \le \pi$ using Hamming window with N=7 **(May 2015)**

12.Using frequency sampling method design a bandpass filter with the following specifications;sampling frequency 8KHz,lower cutoff frequency 1000Hz and upper cutoff frequency 3000Hz**(May 2016)**

UNIT - V FINITE WORD LENGTH EFFECTS IN DIGITAL FILTERS

PART A

1. What do you understand by a fixed point number?

In fixed point arithmetic the position of the binary point is fixed. The bits to the right represent the fractional part and those to the left represent the integer part. For eg. The binary number 01.1100 has the value 1.75 in decimal.

2. Brief on coefficient inaccuracy.

The filter coefficients are computed to infinite precision in the design. But in digital computation they are represented in binary and are stored in registers. The filter coefficients must be rounded or truncated to 'b' bits which produce an error. Due to quantization of coefficients the frequency response of a filter may differ appreciably form the desired response and sometimes the filter may fail to meet the desired specification. If the poles of the filter are close to the unit circle then those of the filter quantized coefficients may be just outside the unit circle leading to instability.

3.What is meant by (zero input) limit cycle oscillation?

For an IIR filter implemented with infinite precision arithmetic the output should approach zero in the steady state if the input is zero and it should approach a constant value if the input is a constant. However, with an implementation using a finite length register an output can occur even with zero input. The output may be a fixed value or it may oscillate between finite positive and negative values. This effect is referred to as (zero input) limit cycle oscillation.

4. What are the assumptions made concerning the statistical independence of various noise sources that occur in realizing the filter?

Assumptions

1. for any n , the error sequence e(n) is uniformly distributed over the range
2. (-q/2) and (q/2). This implies that the mean value of e(n) is zero and its variance is
3. The error sequence e(n) is a stationary white noise source.
4. The error sequence e(n) is uncorrelated with the signal sequence x(n).

5. Explain briefly the need for scaling in the digital filter implementation.

To prevent overflow , the signal level at certain points in the digital filter must be scaled so that no overflow occurs in the adder.

6. What is limit cycles due to overflow? Or What is overflow oscillations?

The addition of two fixed point arithmetic numbers cause overflow when the sum exceeds the word size available. This overflow caused by adder make the filter output to oscillate between maximum amplitude limits. Such limit cycles have been referred to as overflow oscillations.

7. Define 'dead band' of the filter.(May 2016)

The limit cycles occur as a result of quantization effect in multiplication. The amplitudes of the output during a limit cycle are confined to a range of values called the dead band of the filter.

8.Express the fraction (7/8) and (-7/8) in sign magnitude, 2's complement and 1's complement.

Fraction (7/8) = (0.111) in sign magnitude , 1's complement and 2's complement

Fraction (-7/8) = (1.111) in sign magnitude , (1.000) in 1's complement , (1.001) in 2's complement

9.The filter coefficient H = -0.673 is represented by sign magnitude fixed point arithmetic. I the word length is 6 bits , compute the quantization error due to truncation.

(0.673) = (0.1010110…) & (-0.673) = (1.1010110…)

After truncating to 6 bits we get, (1.101011) = -0.671875

Quantization error = $x_q - x$ = (-0.671875)-(-0.673) = 0.001125

10.Give the expression for the signal to quantization noise ratio and calculate the improvement with an increase of 2 bits to the existing bit.

SNR = 6b – 1.24dB, where b=number of bits for representation. With an increase of 2 bits , increase in SNR is approximately 12dB.

11.Why rounding is preferred over truncation in realizing digital filters?(Nov 2015)

1.The quantization error due to rounding is independent of the type of arithmetic.2.The mean of rounding error is Zero. 3. The variance of rounding error signal is low.

12. What is product quantization eror? (May 2014) or What is round-off noise error?

Product quantization error arises at the output of a multiplier. Multiplication of a 'b' bit data with a 'b' bit coefficient results in a product having 2b bits. Since a 'b' bit register is used, the multiplier output must be rounded or truncated to 'b' bits which produces an error. This error is known as product quantization error.

13. Why the limit cycle problem does not exist when FIR filter is realized in direct form or cascade form?

In FIR filters there are no limit cycle oscillations if the filter is realized in direct form or cascade form since these structures have no feedback .

14. What do you understand by input quantization error? (Nov2013)

In DSP the continuous time input signals are converted into digital using a 'b' bit ADC. The representation of continuous signal amplitude to digital introduces an error known as input quantization error.

1**5. What is rounding effect**'?

Rounding is the process of reducing size of a binary number to finite size of 'b' bits such that the rounded b-bit number is closest to the original unquantized number. The rounding process consists of truncation and addition. In rounding of a number to b-bits, first the unquantized number is truncated to b-bits by retaining the most significant b-bits Then zero or one is added to the least significant bit of the truncated number depending on the bit that is next to the least significant bit that is retained.

16. What is fixed point representation?

In this representation the bit to the right represent the fractional part of the number and those to the left represent the integer part. The negative numbers are represented in three different form for fixed point arithmetic:

1. Sign-magnitude form. 2. One's-complement form 3. Two's-complement form.

1. Sign Magnitude form: In this form, the MSB is used to represent the given no. is positive or negative. Let 'N' be the length of binary bits, then (N-i) bit will represent magnitude and MS represent sign. 2. One's complement form: In this form the positive number is represented as in the sign magnitude notation. But the negative number is obtained by complementing all the bits of the positive number. 3. Two's complement form: In this form positive numbers are represented as in sign magnitude and one's complement. The negative number is obtained by complementing all the bits of the +ve number and adding one to the least significant bit.

17. What is floating point representation?

In floating point representation, a positive number is represented as $N = M \times 2^{E}$ where M is called mantissa and it will be in binary fraction format. The value of M will be in the range of $0.5 \le |\omega| \le 1$and E is called exponent and it is either a positive or negative integer. In this form, both mantissaand exponent uses one bit for representing sign.

18.What are the assumptions made concerning the statistical independence of various noise sources that occur in realizing the filter?

Assumptions: For any n, the error sequence e(n) is uniformly distributed over the range (-q/2) and (q/2). This implies that the mean value of e(n) is zero and its variance is The error sequence e(n) is a stationary white noise source. The error sequence e(n) is uncorrelated with the signal sequence x(n).

19.State the method to prevent overflow. **(Nov 2013)**

1. Saturation Arithmetic 2. Scaling

20. State the need for scaling in filter implementation (May 2014)

With fixed-point arithmetic it is possible for filter calculations to overflow. This happens when two numbers of the same sign add to give a value having magnitude greater than one. Since numbers with magnitude greater than one are not representable, the result overflows. It is used to eliminate overflow limit cycle in FIR filters.

21. What is scaling?(Nov 2014)

A process of readjusting certain internal gain parameters in order to constrain internal signals to a range appropriate to the hardware with the constraint that the transfer function from input to output should not be changed. Overflow

oscillations require recursion to exist and do not occur in non recursive FIR filters. There are several ways to prevent overflow oscillations in fixed-point filter realizations. The most obvious is to scale the filter calculations so as to render overflow impossible.

22. Consider the truncation of negative numbers represented in b_u+1 , fixed point binary form including sign bit. Let b_u-b bits be truncated. Obtain the range of truncation error for sign magnitude, 1's complement and 2's complement representation of negative numbers. (Nov2015)

Sign Magnitude: $0 \leq e < 2^{-b}$ 1's

Complement: $0 \leq e < 2^{-b}$ 2's

Complement: $0 \geq e > -2^{b}$

23.What are the 3 quantization errors due to finite word length register in digital filters?

1.Input quantization error 2. Coefficient quantization error 3. Product quantization error

PART B

1.For a system described by the equation y(n) = 0.8 y(n-1) + x(n) with the range of input (-1, +1) and represented by 5 bits. Compute the output noise power due to input quantization.

2.A second order system is described by y(n) = 0.35 y(n-2) + 0.92 y(n-1) + x(n). Study the effect of shift in pole locations with 4 bit coefficient representation in direct and cascade form realization.**(May 2014)**

3. The transfer function of an IIR system is given by, $H(z) = 1 / (1-0.48z^{-1}) (1-0.79z^{-1})$ Find the output roundoff noise power in direct form realization.(Assume that the products are rounded to 3 bits)

4 i)Draw the quantization noise model for second order system in direct and cascade form

ii) Study the limit cycle oscillation of the system which is defined as y(n) = 0.9y(n-1) + x(n) with zero input and y(-1) = 12. Determine the deadband of the system. **(May 2014)**

5. i) Define zero input limit cycle oscillation of the system and explain

ii) Study the limit cycle behavior of the system described by the equation y(n) = 0.95y(n-1) + x(n) . Assume 5 bit sign magnitude representation(Including sign bit) **(Nov 2015)**

6.Study the effects of shift in pole location of second order IIR filter with transfer function $H(Z)= 1/(1-0.5Z^{-}1)(1- 0.45Z^{-1})$ in Direct form. Assume b = 3 bits

7.a)Explain Briefly about various number representation in digital computer

b)Explain the finite word length effects in digital filters **(NOV 2013)**

8.Consider the transfer function $H(Z)=H_1(Z)H_2(Z)$ where $H_1(Z) =1/1- 0.5Z^{-1}$; $H_2(z) =1/ 1- 0.4Z^{-1}$ Find the overall output noise power **(May 2016)**

9. Discuss the various common methods of quantization **(NOV 2013,May 2014)**

10.Derive the steady state input and output noise power of A/D converter used in digital signal processing **(May 2016)**

11.Compare fixed point and floating representations. What is an overflow? Why do they occur? **(Nov2015)**